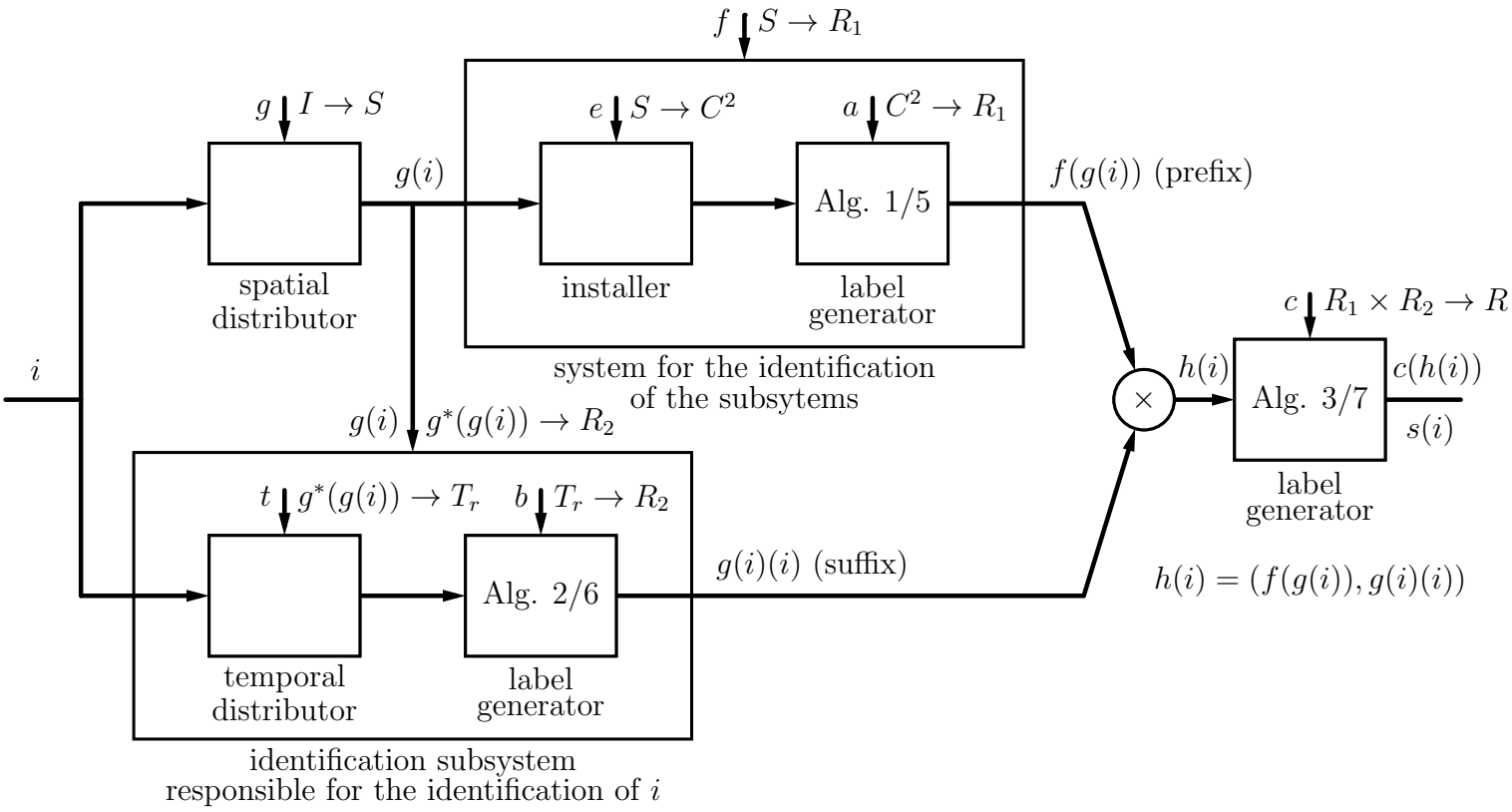
$f \downarrow S \to R_1$
$g \downarrow I \to S$
$e \downarrow S \to C^2$
$a \downarrow C^2 \to R_1$
$g(i)$
Alg. 1/5
$f(g(i))$ (prefix)
spatial distributor
installer
label generator
system for the identification of the subsytems
$c \downarrow R_1 \times R_2 \to R$
i
$h(i)$
$c(h(i))$
Alg. 3/7
$s(i)$
$g(i)$
$g^*(g(i)) \to R_2$
label generator
$t \downarrow g^*(g(i)) \to T_r$
$b \downarrow T_r \to R_2$
$g(i)(i)$ (suffix)
$h(i) = (f(g(i)), g(i)(i))$
Alg. 2/6
temporal distributor
label generator
identification subsystem responsible for the identification of i